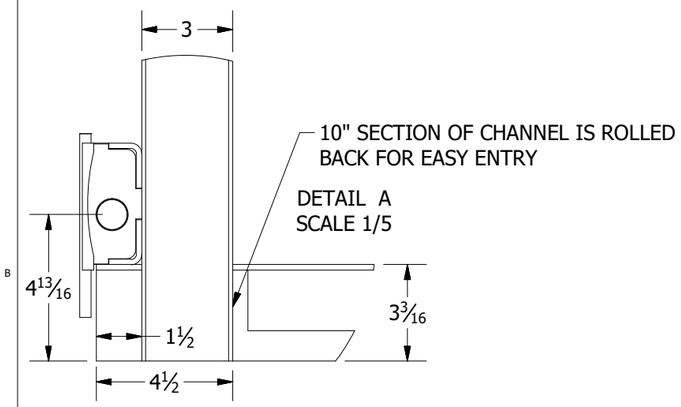

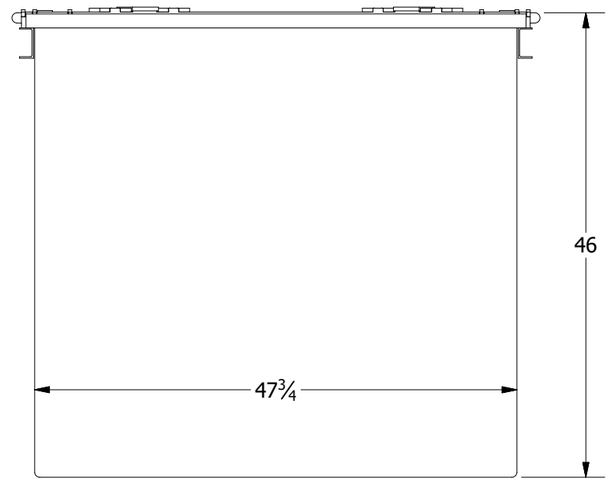

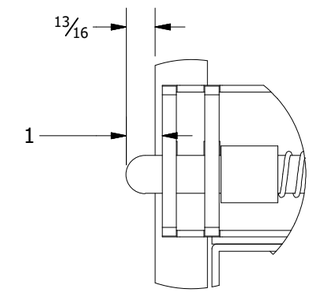

DETAIL C
SCALE 1/4

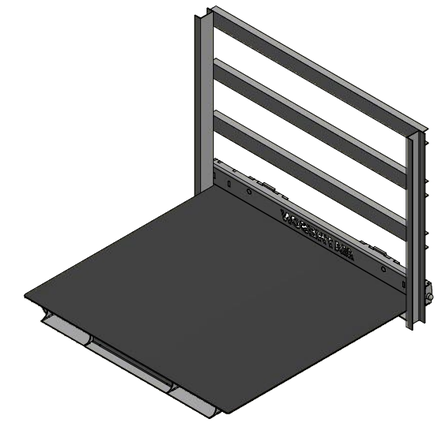

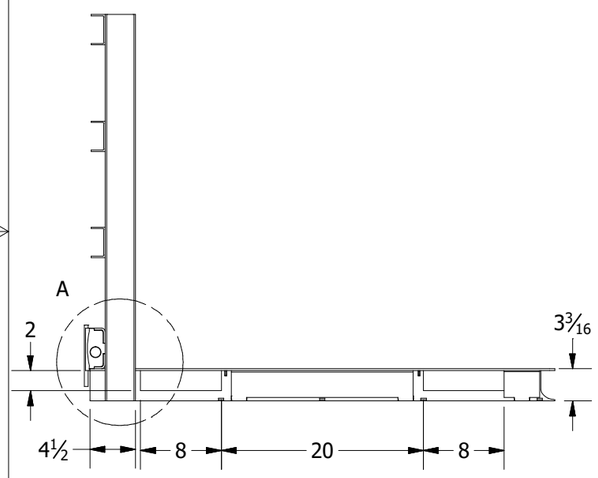

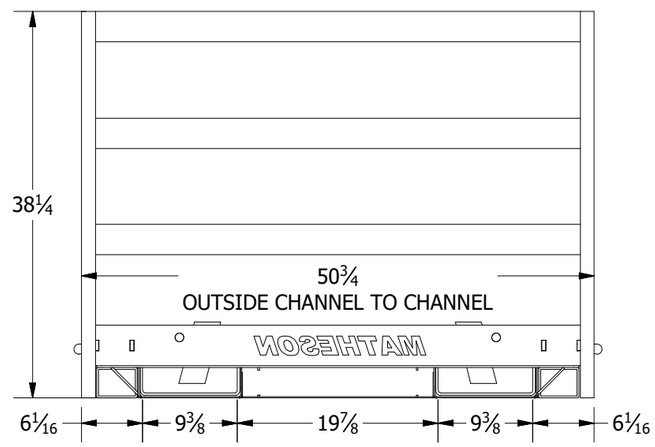

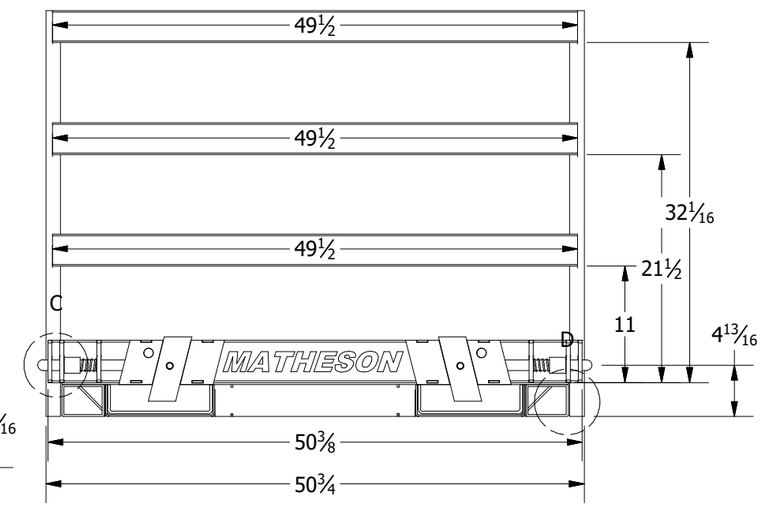

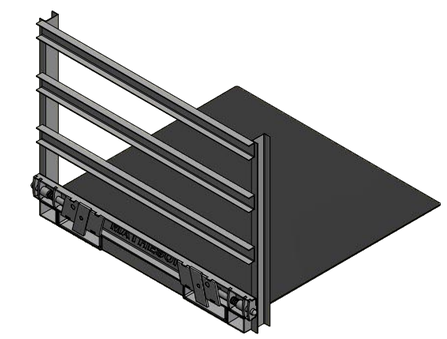

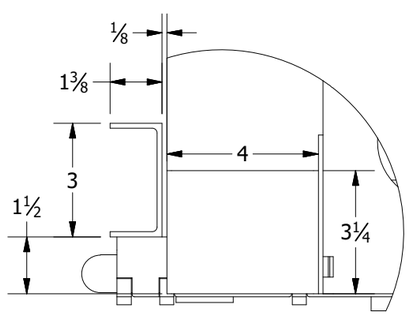

DETAIL B
SCALE 1/4

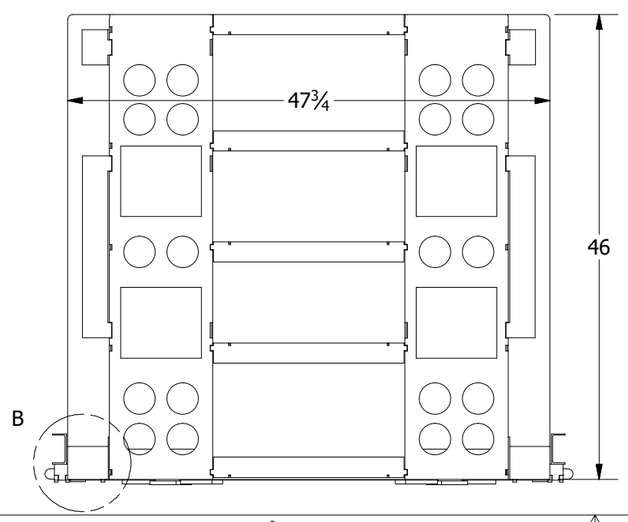

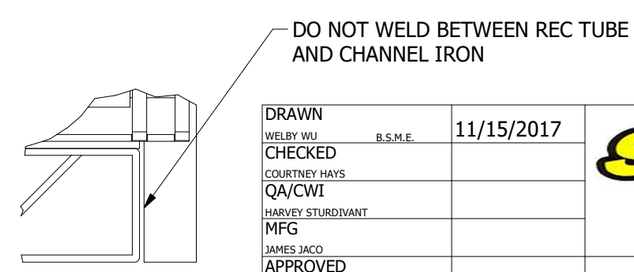

DETAIL D
SCALE 1/4

DRAWN WELBY WU B.S.M.E.	11/15/2017	
CHECKED COURTNEY HAYS		
QA/CWI HARVEY STURDIVANT		
MFG JAMES JACO		
APPROVED JIMMY WALKER		

DIMENIONS ARE IN INCHES UNLESS SPECIFIED OTHERWISE
DO NOT TAKE DIMENSIONS FROM DRAWING

ALL STRUCTURAL MEMBERS ARE ASTM A-36 CARBON STEEL
U.N.O. BASED ON ASME Y14.36M-1989

ALL FILLET WELDS ARE 5/16" U.N.O.

SAFTCART T.M.

CLARKSDALE, MS 38614
800-542-2278
http://www.saftcart.com/
DETAILED MANUFACTURING PLANS

STP-16B-PIN-MATHESON

SIZE	MATERIAL	DWG NO	REV
B	VARIES	STP-16B-PIN-MATHESON	
SCALE VARIES		SHEET 1 OF 1	