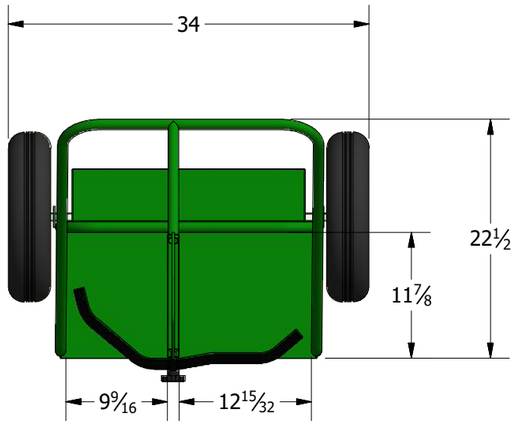

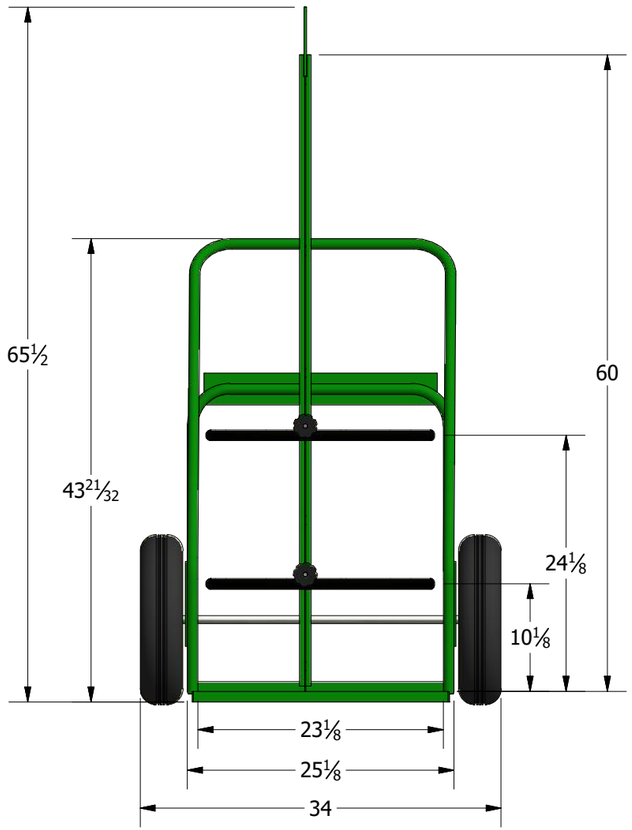

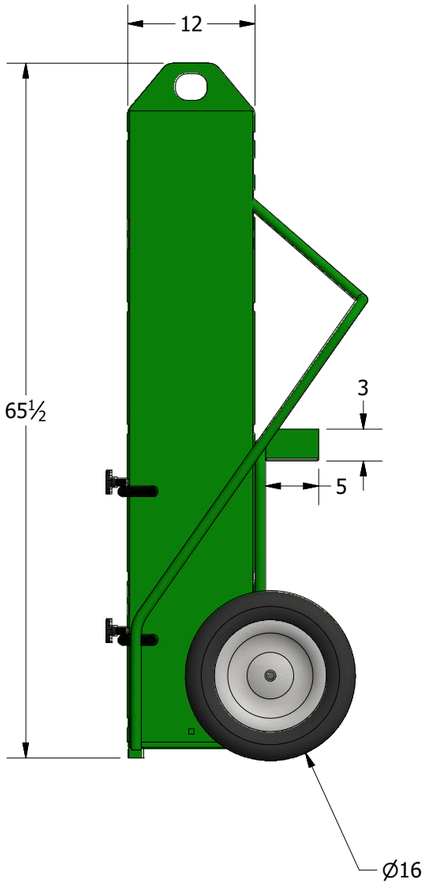

THE MATERIALS AND INFORMATION CONTAINED IN THESE DOCUMENTS ARE THE SOLE PROPERTY OF SAF-T-CART. ANY DESIGN OR PRINCIPLE CONTAINED IN THE PRINTS IS CONSIDERED CONFIDENTIAL. THIS INFORMATION IS SUMMITED TO YOU WITH AGREEMENT THAT IS IT NOT TO BE REPRODUCED, COPIED OR RELEASED IN PART OR IN WHOLE TO ANY COMPANY OR INDIVIDUAL. BY ACCEPING THIS DOCCUMENT YOU ARE AGREEING TO THE STATMENTS ABOVE.

DIMENIONS ARE IN INCHES UNLESS SPECIFIED OTHERWISE DO NOT TAKE DIMENSIONS FROM DRAWING

TOLERANCES
FRACTIONS ± 1/16"
ANGLES ± 0.5°
X.XX ± N/A
X.XXX ± N/A

DRAWN	court_000	9/23/2019
CHECKED	REID WALKER/BILLY MONFORT	
QA/CWI	HARVEY STURDIVANT	
MFG	JAMES JACO	
APPROVED	JIMMY WALKER	

ALL STRUCTURAL MEMBERS ARE ASTM A-36 CARBON STEEL U.N.O. BASED ON ASME Y14.36M-1989

ALL FILLET WELDS ARE 5/16" U.N.O.

SAF-T-CART T.M.
CLARKSDALE, MS 38614
800-542-2278
http://www.saftcart.com/
DETAILED MANUFACTURING PLANS

871-16FW-LE

SIZE	MATERIAL	DWG NO	REV
B	VARIES	871-16FW-LE.drawing	

SCALE VARIES

SHEET 1 OF 1